Load Side of the Main Breaker

Connection Thru a Breaker

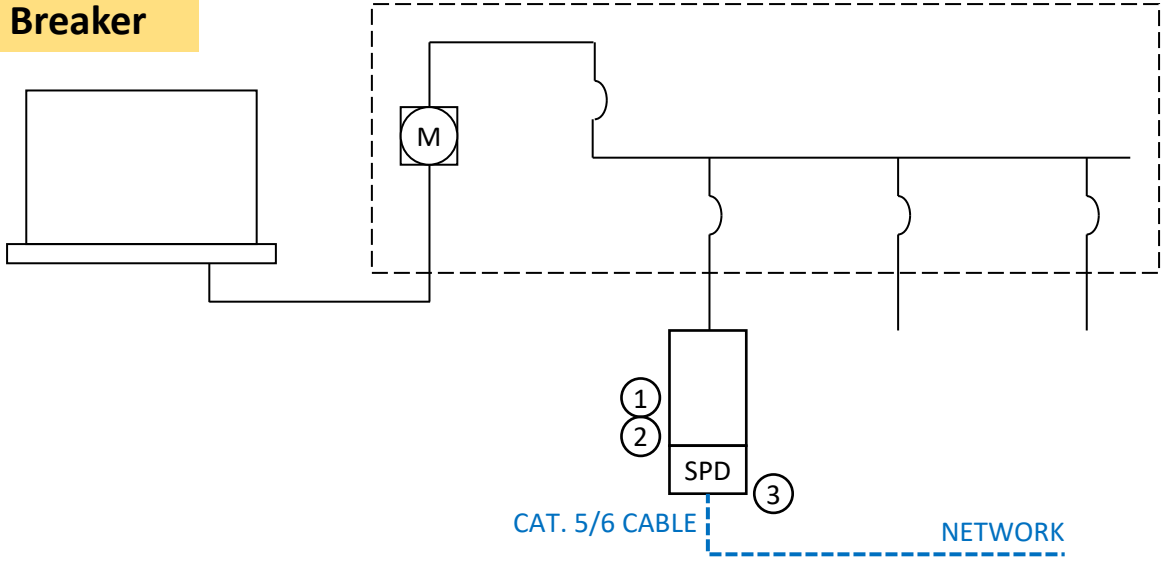

SHEET NOTES

1. 100 A/3P BREAKER.*
2. PHASE, NEUTRAL AND GROUND CONDUCTORS SHALL BE #2 AWG.
3. EXTERNALLY MOUNTED SPD IN PANEL EXTENSION FORM FACTOR. UL 1449 LISTED. SINGLE-PULSE SURGE CURRENT CAPACITY: 200 KA/MODE, TO BE A TESTED VALUE. 15 YEAR WARRANTY. NETWORK-ACCESSIBLE POWER QUALITY & PERFORMANCE MONITORING. WITH COMMISSIONING AND INSTALLED TESTING WITH PORTABLE SURGE GENERATOR-TEST SET. SUBMIT REPORT WITH LET-THRU VOLTAGES TO THE ENGINEER. CURRENT TECHNOLOGY PX3-200 SERIES.

* Circuit breaker shown is for three phase systems. For single or split phase systems, use appropriate configuration.

The product number is given on the previous page for the system configurations shown, with the M4 monitoring system. For other configurations and options for the PX3-200, see the "Product Number Configuration Guide" and the "Monitoring System Selection Guide".

Steve Aguirre, LEED AP * Current Systems * 7409 W. Villa Chula * Glendale, AZ 85310 * 602-361-8408 * steve@cursys.com * www.cursys.com